Allegro 2 ADS

Preparation
Load Script in Allegro

- **Add Script load to allegro.init**
  - (load "C:/Cadence/Allegro2ADS/skill/startup.il")

Preparation
Load Baord

Fbb_D* selected

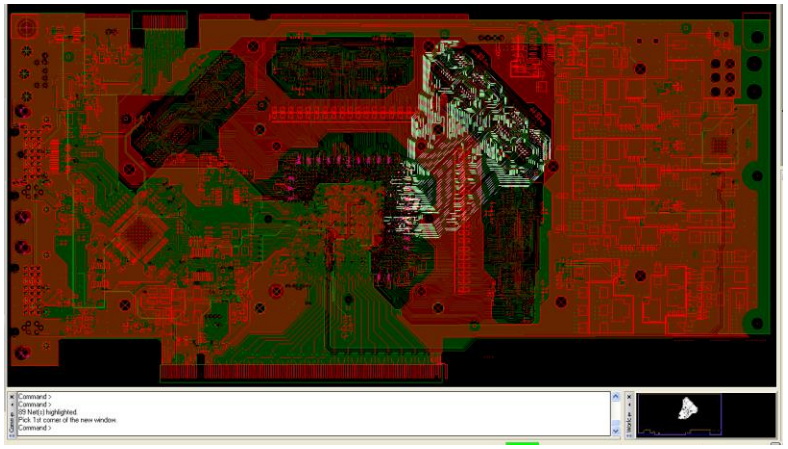

Fbb_CMD* selected

- Just to show nets, not required for Allero2ADS

Start Allero2ADS

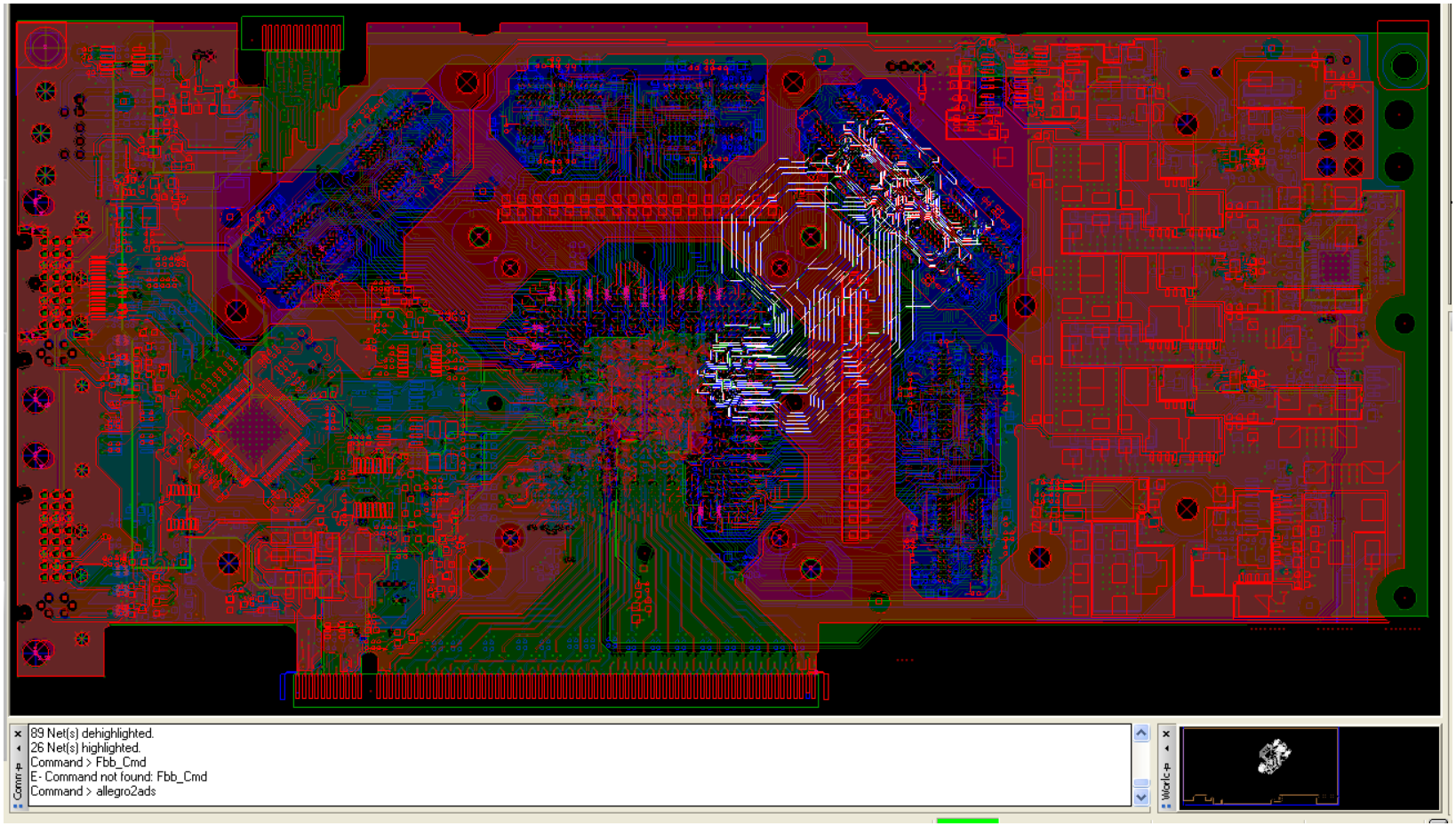

Command: allegro2ads

Allergro2ADS interface

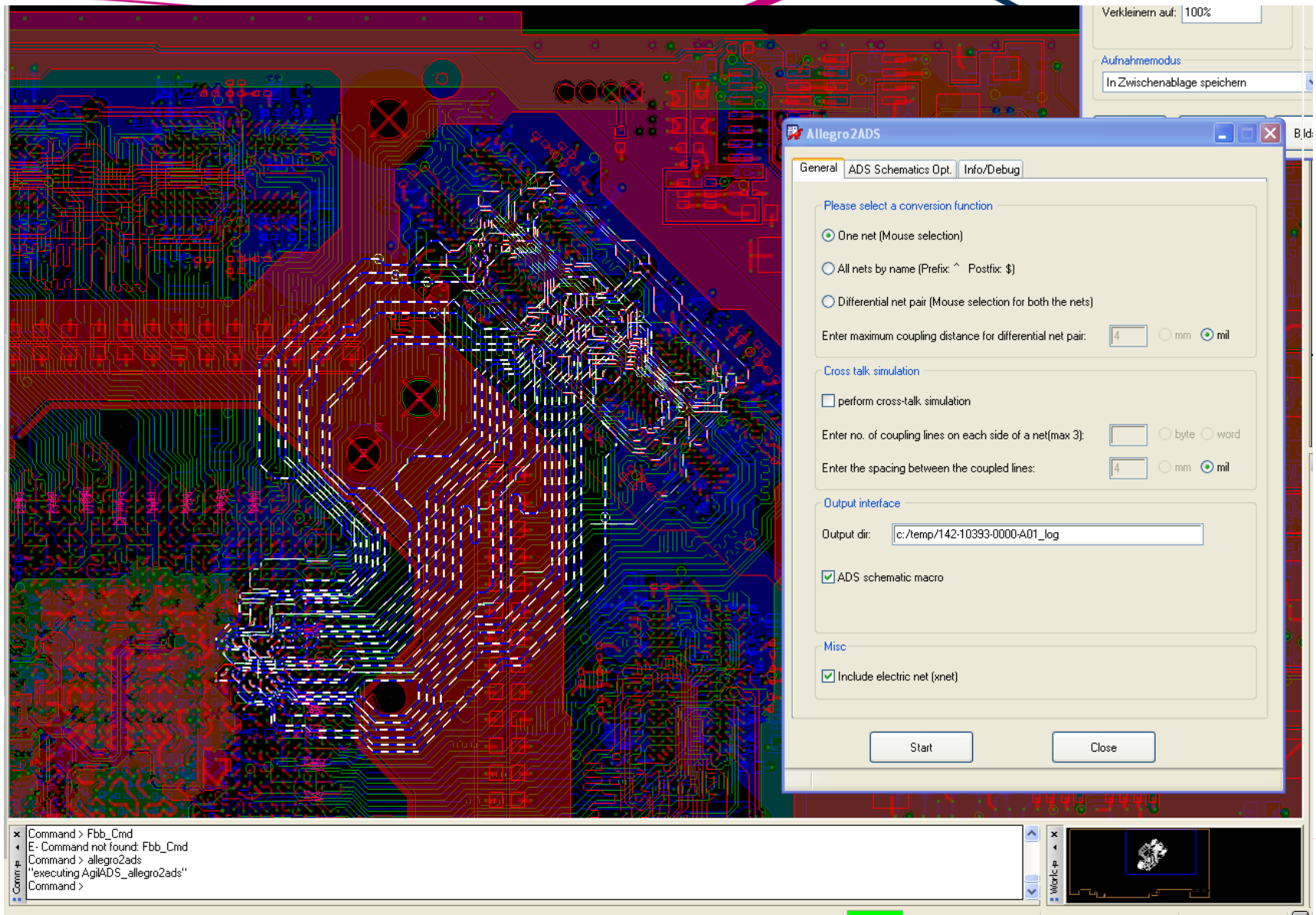

Select net options

- **Select net by**
  - Mouse click
  - Name (had trouble with this one)
  - Differential net by mouse click
- **Performe X-talk**
  - Number of Lines
  - Distance to aggressor (manually measured and used mean spacing)
- **Used for CMD test:**
  - Select by mouse click
  - Xtalk with 10mil

Start Process

- **Press on Start**
- **Select nets with mouse click**
  - Select by name might needs some debugging

Sucessfull extraction message

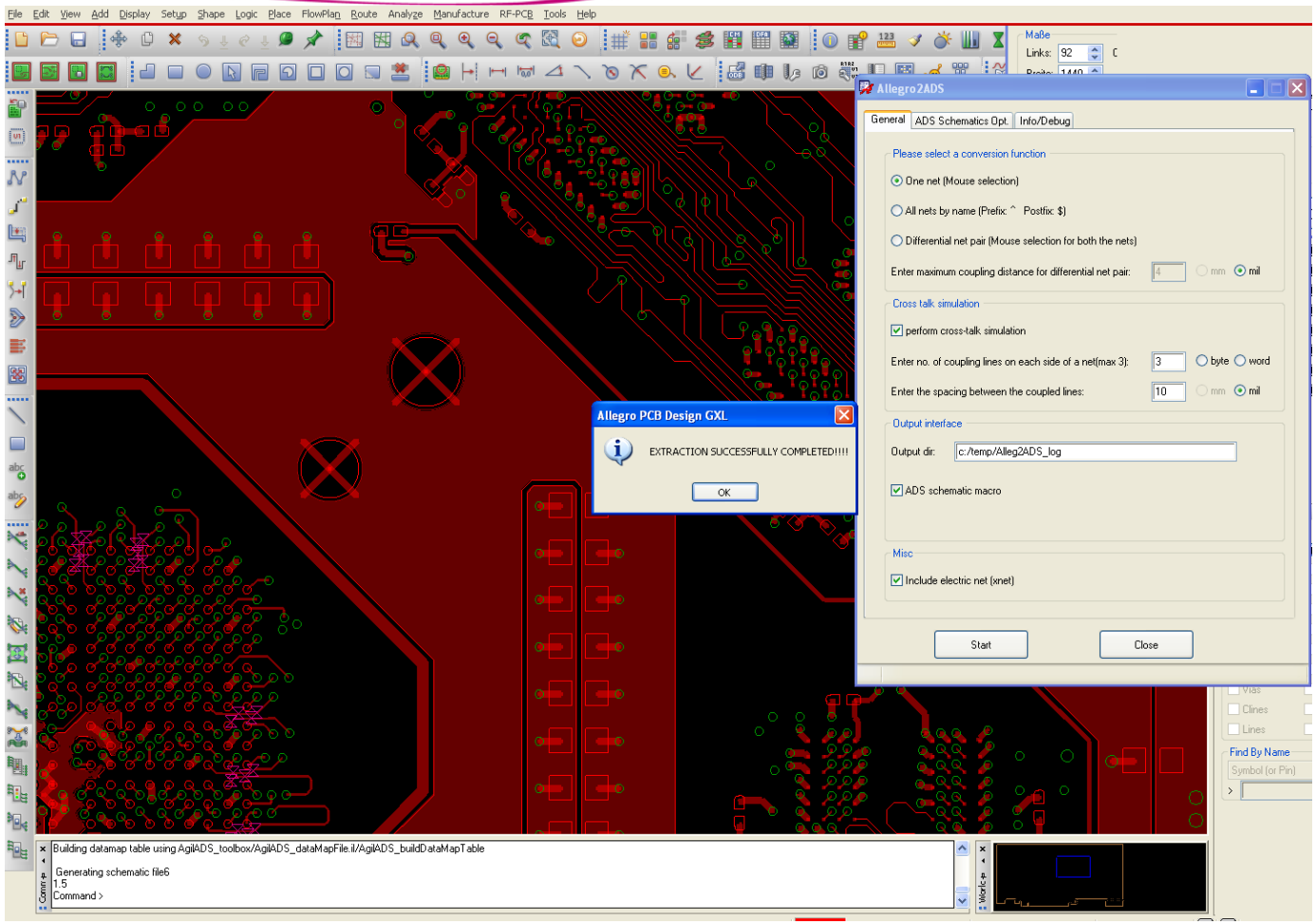

- Ael file is generated in OutputDirectory/scm

ADS2009 Import

- **Via_4Port is used as via model**
- **Load ael file:**
  - load("C:\\temp\\Alleg2ADS_log\\scm\\CLK0_.ael")
- **Import:**
  - Shortened and removed „.“ from the file name to simplify ADS load command and avoid problems with „.“ In file name
  - Changed name of CLK0* to CLK0_ (to avoid message about invalid characters) in CLK0_.ael

scm

Datei Bearbeiten Ansicht Favoriten Extras ?

Zurück Suchen Ordner

Adresse C:\temp\Alleg2ADS_log\scm

	Größe	Typ	Geändert am
	15 KB	AEL-Datei	17.11.2011 16:33
	15 KB	BAK-Datei	17.11.2011 16:31
	38 KB	ATF-Datei	17.11.2011 16:33
_8.ael	7 KB	AEL-Datei	17.11.2011 16:23
il.FBB_CMD_8.ael	7 KB	AEL-Datei	17.11.2011 16:08
il.FBB_D_47.ael	6 KB	AEL-Datei	17.11.2011 16:02
il.FBB_D_47.ael	6 KB	AEL-Datei	17.11.2011 16:03
l.FBB_D_47.ael	6 KB	AEL-Datei	17.11.2011 16:04
.FBB_CLK0_.ael	15 KB	AEL-Datei	17.11.2011 16:31
.FBB_CLK0_.atf	38 KB	ATF-Datei	17.11.2011 16:32
	6 KB	AEL-Datei	17.11.2011 16:02

Advanced Design System 2009 Update 1 (Main)

File View Tools Window DesignKit DesignGuide Help

File View | Project View

C:\Daten\ADS\AEL_import_prj
Via_4Port.dsn

C:\Daten\ADS\AEL_import_prj

Command Line [Session file: C:\DOKUME~1\Hermann\LOKALE~1\Temp\329495.dem]

Command History

Command >>

load("C:\\temp\\Alleg2ADS_log\\scm\\CLK0_.ael")

Save Favorite

Del Favorite

Apply | Clear History | Cancel | Help

Result of automatic import

Before cleanup

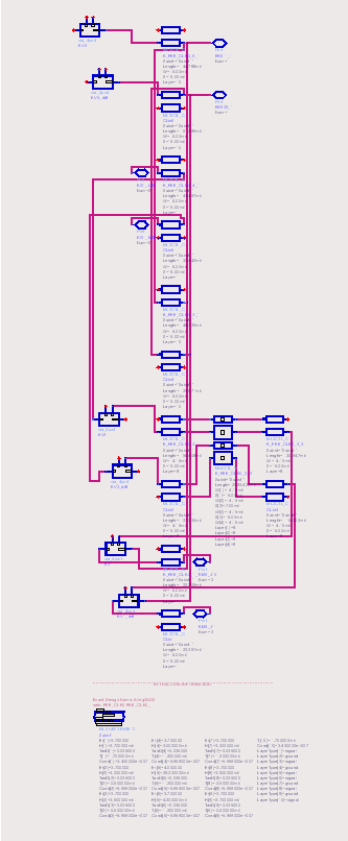

- After manual cleanup

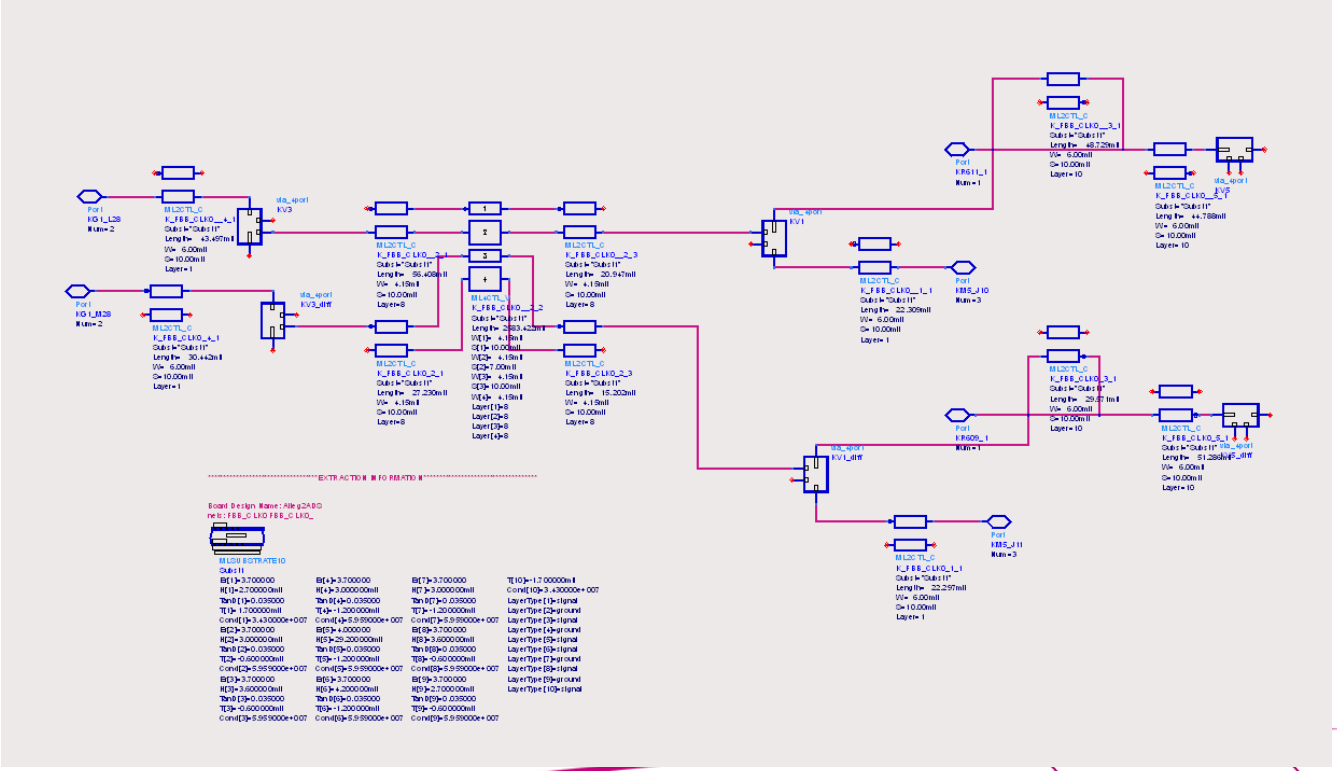

Result of Import

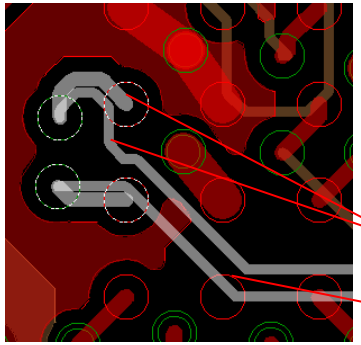

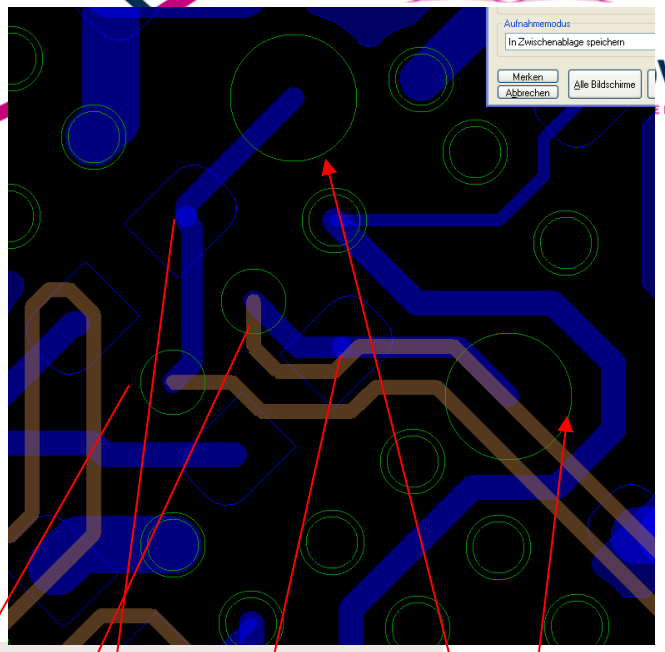

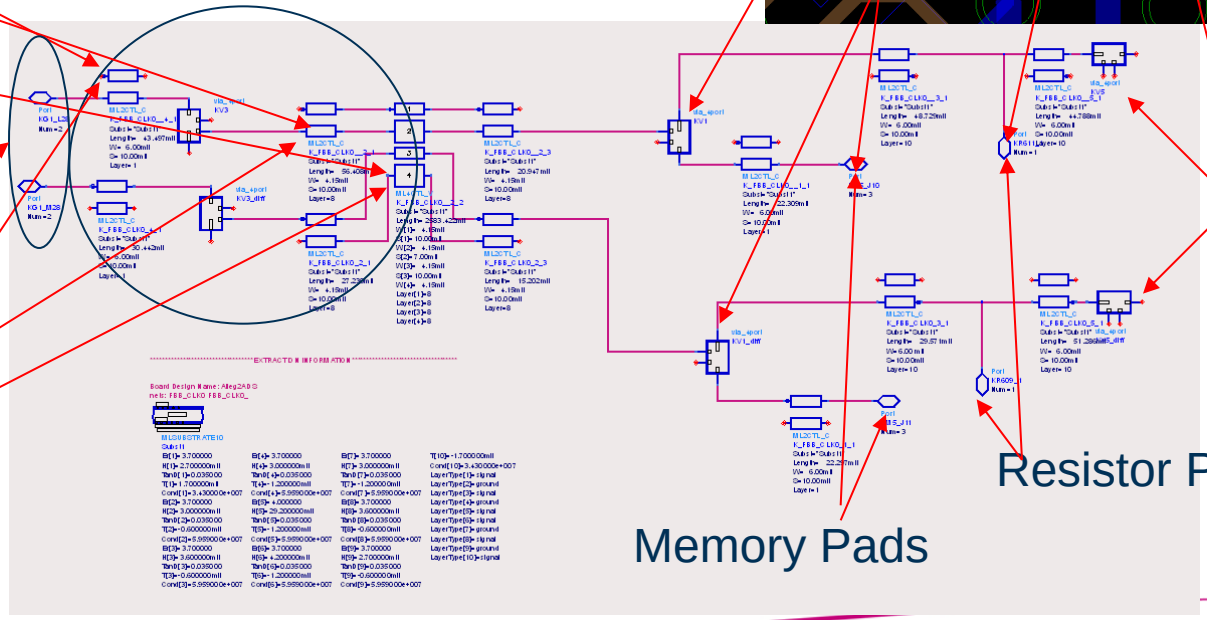

Controller Pads

Uncoupled Top
Uncoupled In7
Coupled In7

VIA

Resistor Pads

Memory Pads